MegaSig

V1.4 20260811

ACC 1811-Sx 单轴工业加速度计

产品规格书

ACC 1811-Sx Uniaxial Industrial Accelerometer

Product Specification

产品规格书-中文 1
Product introduction-EN 4

从此文件发布日期起，在此发表的是当前或者拟定的信息。由于我们会不断对产品进行改进和增加特征此出版物中的信息如有变动恕不另行通知。

From the date of this document's release, the information published here is current or proposed. As we will continuously improve and add features to our products, the information in this publication is subject to change without further notice.

最终版权所有（c）深圳市美格信测控技术有限公司
Copyright (c) Shenzhen MegaSig Measurement & Control Technology Company Limited

产品简介



ACC 1811-Sx 单轴工业加速度计

ACC 1811 是工业加速度计，采用坚固耐用的不锈钢材质；并且整体采用密封焊接，外壳防护等级达到 IP68；同时采用外壳隔离设计，抗干扰；是工业现场测量的理想选择。

ACC 1811 经常搭配 MegaSig PM 6143 等内置 IEPE 采集卡达到优秀测试效果。

功能特点

- 整体气密焊接
- 外壳隔离设计，抗干扰，高稳定性
- 工业现场测量

规格参数

ACC 1811-Sx 系列		
灵敏度等级	S3	S5
灵敏度	10mV/g	100mV/g
测量范围	±500g	±50g
频率范围	1Hz - 10kHz（±10%）	1Hz - 10kHz（±10%）
最大横向灵敏度	≤5%	≤5%
谐振频率	≥35kHz	≥35kHz
冲击抵抗	1000g	1000g
工作电压范围	+20 ~ ＋30VDC	+20 ~ ＋30VDC
工作电流范围	+2mA ~ 20mA（典型4mA）	+2mA ~ 20mA（典型4mA）
工作温度范围	-40℃ ~ 120℃	-40℃ ~ 120℃
输出峰值	≤ 6V	≤ 6V
直流偏置	8V ~ 12V	8V ~ 12V
输出阻抗	＜100Ω	
主体材料	不锈钢	
防护等级	IP68（激光焊接）	
重量	≤74g	
电器连接	5/8-24UNF　2-Pin MIL-C-5015	
安装螺纹	M6	

外观尺寸和安装方式示意

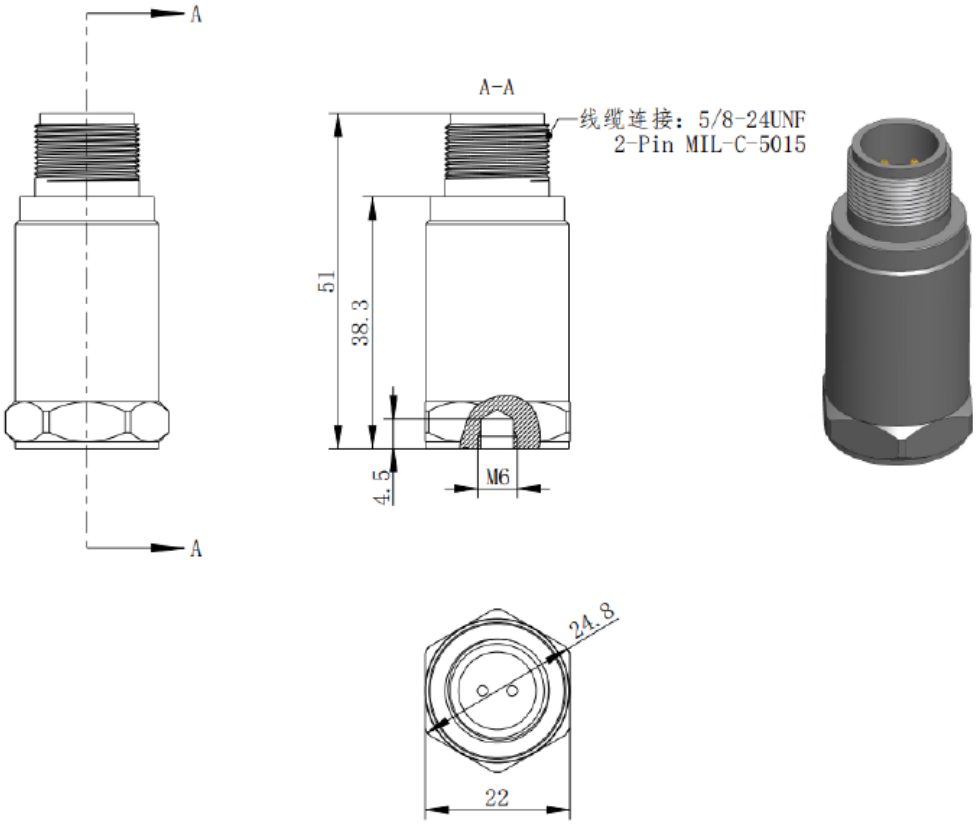

在无深圳市美格信测控技术有限公司优先书面授权书前提下，此出版物任何一个部分不可通过任何形式进行复制、修改和翻译。对于非法复制、修改和翻译商业行为，将根据国家知识产权相关法律追求其法律责任。

深圳市美格信测控技术有限公司
0755.8950.8393
sale@megasig.com
中国, 深圳,光明
www.megasig.com

Product introduction



ACC 1811-Sx Uniaxial Industrial Accelerometer

The ACC 1811 is an industrial accelerometer constructed from durable stainless steel, featuring a fully sealed and welded design with an IP68-rated protective enclosure. Its isolated housing design ensures strong resistance to interference, making it an ideal choice for industrial field measurements.

The ACC 1811 is often paired with built-in IEPE acquisition cards such as the MegaSig PM 6143 to achieve excellent testing performance.

Features

- Fully hermetically sealed welding
- Isolated housing design for interference resistance and high stability
- Ideal for industrial field measurements

Specification parameters

ACC 1811-Sx		
Sensitivity grade	S3	S5
Sensitivity	10mV/g	100mV/g
Measurement range	±500g	±50g
Frequency range	1Hz - 10kHz（±10%）	1Hz - 10kHz（±10%）
Maximum transverse sensitivity	≤5%	≤5%
Resonant frequency	⩾35kHz	⩾35kHz
Shock survivability	1000g	1000g
Operating voltage range	+20 ~ ＋30VDC	+20 ~ ＋30VDC
Operating current range	+2mA ~ 20mA（typical 4mA）	+2mA ~ 20mA（typical 4mA）
Operating temperature range	-40℃ ~ 120℃	-40℃ ~ 120℃
Output peak level	≤ 6V	≤ 6V
Dc bias voltage	8 ~ 12V	8 ~ 12V
Output impedance	＜100Ω	
Housing material	Stainless steel	
Protection rating	IP68（Laser welded）	
Weight	≤74g	
Electrical connection	5/8-24UNF 2-Pin MIL-C-5015	
Mounting thread	M6	

Dimensional Drawing and Mounting Diagram

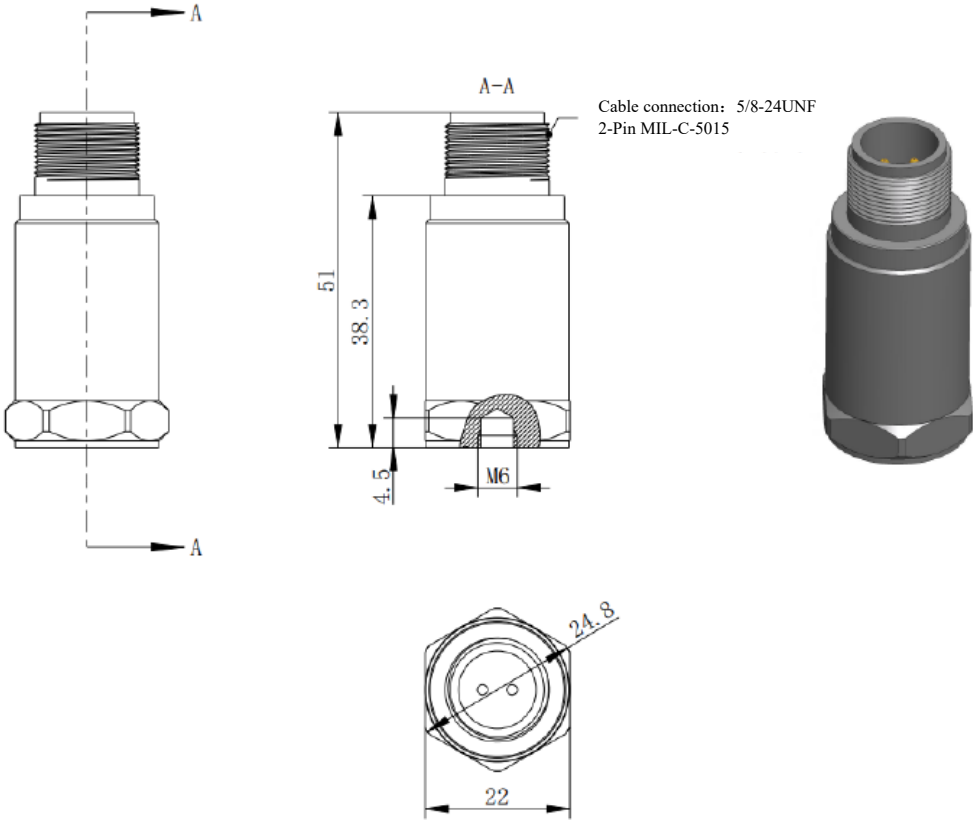

Without the prior written authorization of Shenzhen MegaSig Measurement & Control Technology Co., Ltd. no part of this publication may be reproduced, modified or translated in any form. Legal liability will be pursued in accordance with the national laws on intellectual property rights for commercial activities involvingillegal reproduction, modification or translation.

Shenzhen MegaSig Co., Ltd.
0755.8950.8393
sale@megasig.com
GuangMing, Shenzhen,China
www.megasig.com